Surge Arrestors

with 7-16 DIN and Types N Bulkhead Interfaces
Type APG Arrestor Plus® Gas Tube Series

Andrew Institute offers installation training.

Description

The APG Surge Arrestors are designed to protect equipment from damaging transients induced by lightning strikes. The APG Surge Arrestor is a wideband device that is available in a variety of interface combinations.

Replaceable gas tubes set the level at which transient surges are suppressed. Therefore, care must be taken to ensure the correct values are used at initial setup. Gas tubes are available with 90 and 350 Volt ratings.

Installation

The APG Surge Arrestor is a **bidirectional** RF device. Either RF port may be connected to the equipment side or the antenna side of the transmission line interface while providing equivalent protection. Do not leave the APG Surge Arrestor RF ports exposed in outdoor applications.

The APG Bulkhead Surge Arrestor grounding is accomplished through the surge arrestor body at the point of attachment to the bulkhead. The bulkhead must be attached to a master ground bar or the system's earth ground ring to ensure a low impedance path to ground.

During installation, all grounding contact surfaces must be clean, dry, and free of oxidation.

An optional Bulkhead Angle Adapter Kit is available to facilitate mounting when a grounding bulkhead is not available. Order Type 243951 for Type N and Type 243950 for Type 7-16 DIN.

Microwave Performance Testing

The APG Surge Arrestors can be readily tested for microwave performance using any network analyzer. Fault location testing can be performed through the APG Surge Arrestor using standard TDR equipment.

Gas Tube Replacement

Since the transient voltage suppression characteristics of gas tubes can be altered by lightning surges, periodic maintenance is required to replace gas tubes at locations of suspected lightning strikes. Andrew Corporation recommends that a maintenance schedule of no less than once per year be followed.

To maintain the optimal levels of system protection, replacement gas tube values must match those that are being replaced. Gas tubes are marked according to their "turn on" voltage. The numbers 90 or 350 are printed on the side of each gas tube to indicate its rating.

Andrew replacement gas tubes are available in packages of 10. Replacement gas tube caps are packed individually.Type numbers are:
GASTUBE-090; GASTUBE-350; GASTUBE-CAP

Gas tube replacement is performed by unscrewing the hex cap on the surge arrestor body, pulling the small tube out of the spring fingers and pushing the new tube into place. **Note:** Gas tube is non-polarized allowing installation in either direction.

If any visible signs of arcing are present, the cap should also be replaced. **Note:** The gas tube nut must be tightened to 15-20 in-lbs to ensure proper weather resistance and optimum electrical performance. Be careful to prevent contaminants from falling into the surge arrestor body during gas tube replacement.

⚠ WARNING

Do not connect this device or replace gas tube while a storm is occurring or approaching. Do not operate system unless gas tube nut is tightened in place. APG Series surge arrestors are weatherproof/watertight devices. The gas tube cap must be tightened as specified to ensure a watertight seal and best electrical performance.

NOTICE

The installation, maintenance, or removal of antenna systems requires qualified, experienced personnel. Andrew installation instructions are written for such personnel. Antenna systems should be inspected once a year by qualified personnel to verify proper installation, maintenance, and condition of equipment.

Andrew disclaims any liability or responsibility for the results of improper or unsafe installation practices.

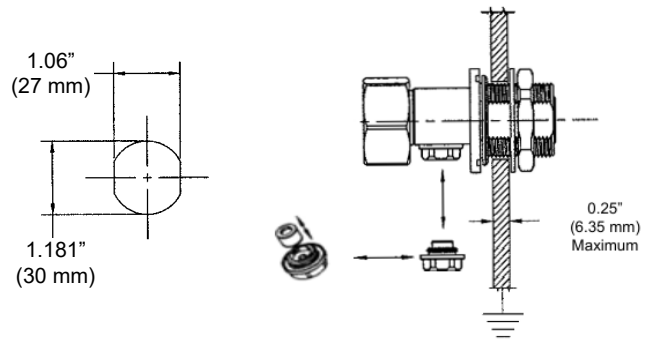

7-16 DIN Bulkhead Interface

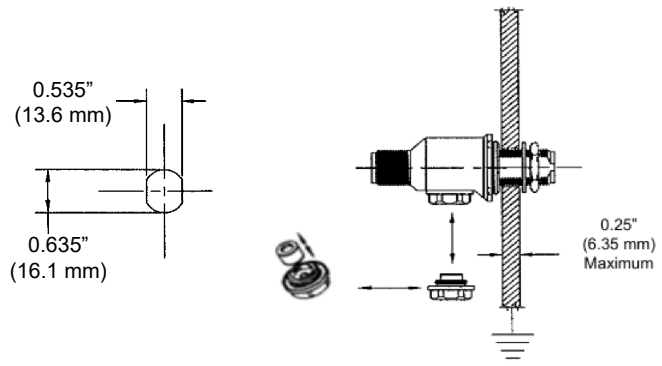

Type N Bulkhead Interface

	表一 有毒有害物质或元素名称及含量标识格式					
	有毒有害物质或元素					
部件名称 (Part Name)	铅 (Pb)	汞 (Hg)	镉 (Cd)	六价铬 (Cr6+)	多溴联苯 (PBB)	多溴二苯醚 (PBDE)
連接器 (Connector)	X	O	O	O	O	O

O: 表示有毒有害物质在该部件所有的均质材料中的含量均在SJ/T 11363-2006规定的限量要求以下.
X: 表示该有毒有害物质至少在该部件的某一均质材料中的含量超出SJ/T 11363-2006规定的限量要求.

ANDREW an Amphenol company
2601 Telecom Parkway, Richardson, Texas, 75082, USA
www.andrew.com

Technical Support
+1 888 297 6433, Option 3 (Toll Free US and Canada)
awpnarsupport@andrew.com

Notice: ANDREW disclaims any liability or responsibility for the results of improper or unsafe installation, inspection, maintenance, or removal practices.
Aviso: ANDREW no acepta ninguna obligación ni responsabilidad como resultado de prácticas incorrectas o peligrosas de instalación, inspección, mantenimiento o retiro.
Avis : ANDREW décline toute responsabilité pour les conséquences de procédures d'installation, d'inspection, d'entretien ou de retrait incorrectes ou dangereuses.
Hinweis: ANDREW lehnt jede Haftung oder Verantwortung für Schäden ab, die aufgrund unsachgemäßer Installation, Überprüfung, Wartung oder Demontage auftreten.
Atenção: A ANDREW abdica do direito de toda responsabilidade pelos resultados de práticas inadequadas e sem segurança de instalação, inspeção, manutenção ou remoção.
Avvertenza: ANDREW declina eventuali responsabilità derivanti dell'esecuzione di procedure di installazione, ispezione, manutenzione e smontaggio improprie o poco sicure.
注意：ANDREW 公司申明對於不恰當或不安全的安裝、檢驗、維修或拆卸操作所導致的后果不負任 何義務和責任

©2025 ANDREW, an Amphenol company. All rights reserved. Amphenol and ANDREW are registered trademarks of Amphenol and/or its affiliates in the U.S. and other countries. All product names, trademarks and registered trademarks are property of their respective owners.